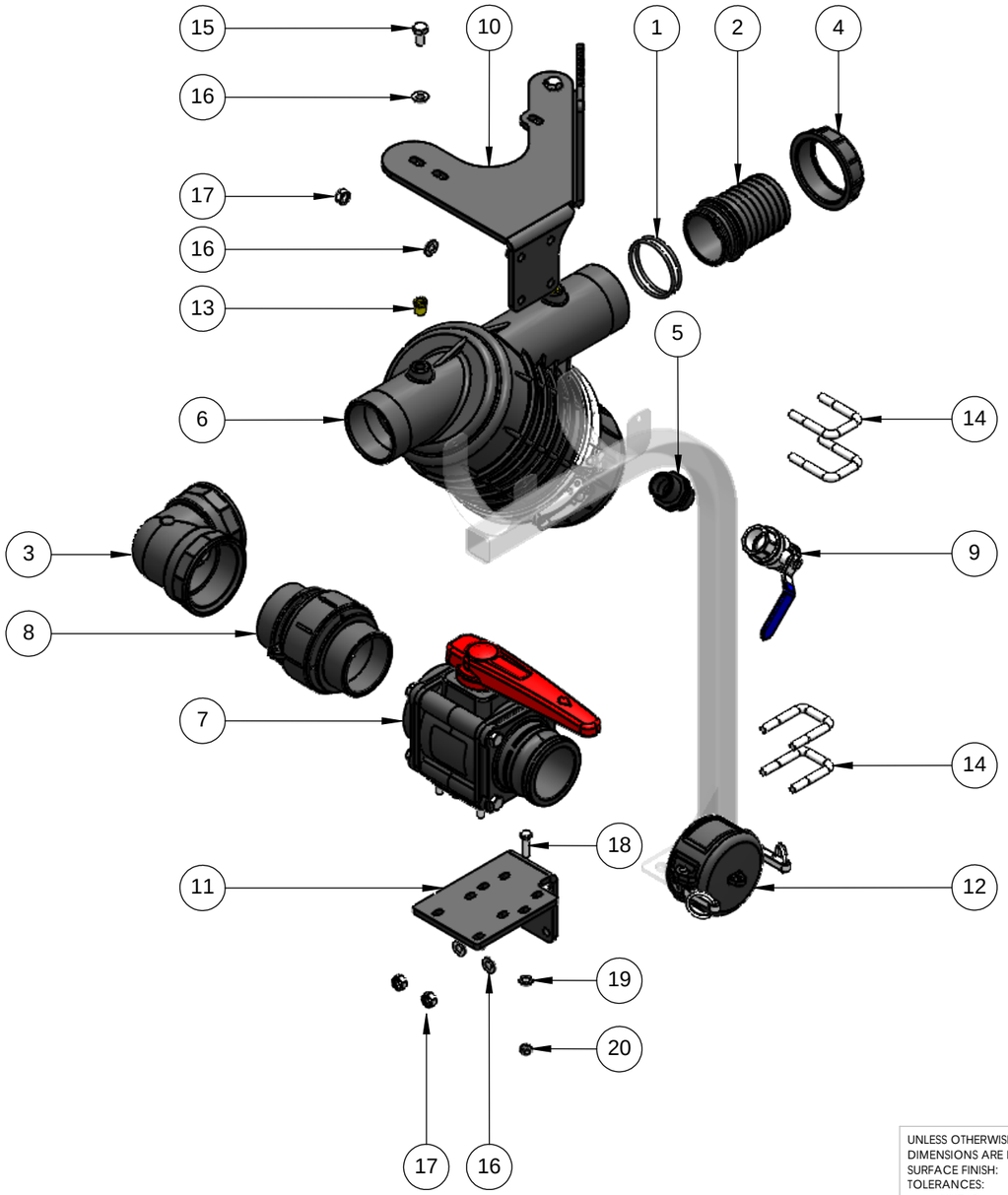

ITEM NO.	PART NUMBER	DESCRIPTION	QTY.
1	AG10091	O RING 3"	2
2	A106975	TAIL 3"	1
3	A1202099	ELBOW 3" FEMALE	1
4	A2002090	FLY NUT 3"	1
5	A250040	NIPPLE 1"	1
6	A3352092	3" IN-LINE FILLING FILTER 32 MESH	1
7	A453007D99	BALL VALVE BOLTED 2WAY 3"F	1
8	A5042019	NON RETURN VALVE 3F-3M	1
9	BALL1F2	BALL VALVE 1" 2 WAY	1
10	BP-750-30	BRACKET IN LINE FILTER	1
11	BP-750-31	BRACKET BALL VALVE	1
12	K-300-CAP	CAMLOCK 3" CAP 'DC'	1
13	TFRB1418	REDUCING BUSH 1/4" X 1/8" BRASS	2
14	XBMBB	U-BOLT 40MM X 10	4
15	M10X20	M10 X 20 SET SCREW HT ZP	2
16	M10FWASHER	M10 FLAT WASHER ZP	10
17	M10NNUT	M10 NYLOC NUT HT ZP	8
18	M8X30	M8 X 30 SET SCREW HT ZP	4
19	M8FWASHER	M8 FLAT WASHER ZP	4
20	M8NNUT	M8 NYLOC NUT HT ZP	4

KB-7500-13A PARTS ILLUSTRATION

THIS DRAWING IS FOR ILLUSTRATION PURPOSE ONLY
PLEASE REFER TO THE PARTS LIST.

UNLESS OTHERWISE SPECIFIED:
DIMENSIONS ARE IN MILLIMETERS
SURFACE FINISH: ± 0.2
TOLERANCES:
LINEAR: ± 0.5
ANGULAR: ± 0.5

FINISH: N/A

DEBUR AND BREAK SHARP EDGES

DO NOT SCALE DRAWING

ISSUE: A

CROPLANDS
A NUFARM LIMITED COMPANY

	NAME	SIGNATURE	DATE	REVISION
DRAWN	RPJUCO		291118	
CHK'D				
APPV'D				
MFG				
Q.A				

TITLE: **7000LT WEEDIT**

WEEDIT 7000 3" FILL MANIFOLD

MATERIAL: N/A

DWG NO. KB-7500-13A

A3

WEIGHT:

SCALE: 1:7.5

SHEET 1 OF 1

COPYRIGHT PROPRIETOR

THIS DRAWING IS THE PROPERTY OF CROPLANDS PTY. LTD.
AND MUST BE TREATED AS CONFIDENTIAL.
REPRODUCTION OF THIS DRAWING (OR PART THEREOF) OR COMMUNICATION OF
ITS CONTENTS IS PROHIBITED WITHOUT THE CONSENT OF CROPLANDS PTY. LTD.